Crossref
**DOI:** 10.31643/2027/6445.26
Metallurgy and Metallurgical Engineering

creative commons

# Mineralogical features and optimization of combined beneficiation flowsheets for refractory gold-bearing ores of the Pakrut deposit (Central Tajikistan)

**[1,2*]Kholov Kh.I., [3]Juraqulov Sh.R., [1]Samihzoda Sh.R., [4]Mahmudov H.A.**

*[1]V.I. Nikitin Institute of Chemistry NAST, Dushanbe, Tajikistan*
*[2]TSPU named after S. Aini, Dushanbe, Tajikistan*
*[3]Institute of Geology, Earthquake-Resistant Construction and Seismology of the NAST, Dushanbe, Tajikistan*
*[4]Mining Metallurgical Institute of Tajikistan, Buston, Tajikistan*

**Corresponding author email: Kholmahmad90@mail.ru*

Received: *October 8, 2025*
Peer-reviewed: *November 1, 2025*
Accepted: *January 5, 2025*

**ABSTRACT**
Against the backdrop of depleted rich deposits and the increasing proportion of refractory gold-bearing ores, improving their processing methods has become an urgent task. This work presents the results of a comprehensive study of gold-bearing ores from the Pakrut deposit, located in Central Tajikistan's Zeravshan–Gissar zone. Mineralogical analysis established that the principal gold carriers are pyrite and arsenopyrite, with the metal predominantly localized as fine inclusions and fracture-related accumulations. A notable fraction of gold occurs as free particles (17.03%); however, the dominant share is fracture-bound (62.41%) and is predominantly associated with arsenopyrite. This distribution explains the limited efficiency of single-stage treatment and substantiates the need for combined unlocking and recovery routes. Physicochemical studies confirmed the ores' refractory nature, attributed to the fine dissemination of gold within the sulfide matrix, combined with high hardness and abrasiveness. At the laboratory scale, various beneficiation flowsheets were tested, including direct cyanidation; flotation combined with additional leaching of tailings; and variants incorporating gravity separation. A comparative analysis showed that the highest gold recovery rate (92.23%) was achieved by the flowsheet involving cyanidation, followed by tailings leaching and flotation. Although direct cyanidation also demonstrated a high recovery rate (90.05%), it was less effective. The flotation–cyanidation and gravity–flotation schemes yielded comparatively lower performance. The obtained data confirm the effectiveness of an integrated approach to processing the refractory ores from the Pakrut deposit. Optimizing the beneficiation flowsheet enables a significant increase in precious metal recovery, reduces technological losses, and minimizes environmental risks associated with the accumulation of arsenic-bearing waste.

***Keywords:*** Pakrut deposit, refractory ores, gold, pyrite, arsenopyrite, cyanidation, flotation, gravity separation, mineralogy, beneficiation.

***Information about authors:***

| | |
|---|---|
| ***Kholov Kh.I.*** | *Cand. Sc. (Tech.), Senior Researcher at the Laboratory of Ore Processing, V.I. Nikitin Institute of Chemistry, National Academy of Sciences of Tajikistan; Senior Lecturer of the Department of Chemical Technology and Ecology at the Tajik State Pedagogical University named after S. Aini, 734063, Dushanbe, Aini St., 299/2, Republic of Tajikistan. E-mail: Kholmahmad90@mail.ru; ORCID ID: https://orcid.org/0000-0002-8202-5919* |
| ***Juraqulov Sh.R.*** | *Senior Researcher, Institute of Geology, Earthquake-Resistant Construction and Seismology, National Academy of Sciences of Tajikistan; 734063, Republic of Tajikistan, Dushanbe, Ayni St., 299/2. E-mail: shaih8888@mail.ru; ORCID ID: https://orcid.org/0009-0001-1255-8541* |
| ***Samikhov Sh.R.*** | *Dr. Sc. (Tech.), Chief Researcher at the Laboratory of Ore Processing, V.I. Nikitin Institute of Chemistry, National Academy of Sciences of Tajikistan, 734063, Dushanbe, Aini St., 299/2, Republic of Tajikistan. E-mail: samikhov72@mail.ru; ORCID ID: https://orcid.org/0009-0002-7454-7343* |
| ***Mahmudov H.A.*** | *Cand. Sc. (Tech.), Dean of the Faculty of Mining, Mining and Metallurgical Institute of Tajikistan, 735730, Buston, Mayakovski St. 6, Republic of Tajikistan. E-mail: obogatitel_0903@mail.ru; ORCID ID: https://orcid.org/0009-0005-8428-5334* |


## Introduction

In the current context of depleting rich gold deposits, the importance of beneficiating low-grade and “refractory” ores is growing [[1], [2]]. In Tajikistan and worldwide, the quality of mined gold-bearing feedstock is declining: an increasing share of extracted ores are minerals with low gold contents and complex composition [[3], [4]]. According to expert estimates, more than one-third of gold reserves are classed as difficult-to-beneficiate (refractory) ores [5]. A similar trend is

observed globally: roughly 24% of the world's gold reserves are contained in refractory ores [[6], [7]]. Most such deposits are concentrated in traditional gold-mining regions, including CIS countries [8]. Mining forecasts indicate that production from refractory ores will grow at a faster rate (about 1.4% per year) than from conventional ores (≈0.3% per year) [9]. At the same time, conventional processing technologies for these ores remain insufficiently effective: analyses of Russian operations show that, as mining shifts toward poorer and more complex ores, precious-metal losses to tailings have reached 60–85% [10]. All this underscores the urgency of developing modern, more efficient, and environmentally safer beneficiation and leaching approaches for refractory gold-bearing ores [11].

The Pakrut deposit (Central Tajikistan) is an important prospective gold-mining target within the Zeravshan–Gissar zone. Hydrogeologically and structurally, it lies on the southern slopes of the Gissar Range in the Sardoi-Miyona River basin [[12], [13]]. Genetically, Pakrut ores belong to the quartz–gold–low-sulfide formation. Primary ore bodies are represented by lens-like and vein-disseminated zones of metasomatites of carbonate–quartz–albite and quartz–sericite composition, occurring within strongly altered chlorite–sericite–quartz schists of the Upper Ordovician [14]. Mineralization is chiefly confined to subvertical fracture zones, with networks of quartz veins and faults developed there. The key controlling structures are the Pakrut anticline and the cross-cutting Graphite Fault. The principal ore minerals in the mineralized zone are pyrite and arsenopyrite, which dominate the gold-bearing veins. In other words, the richest gold areas are associated with vein-disseminated ores saturated with pyrite and arsenopyrite inclusions.

Native gold in Pakrut ores is extremely fine [15], occurring as dusty or granular inclusions and irregular clod-, droplet-, or platy aggregates, typically along quartz–carbonate boundaries, in sulfide intergranular fissures, and in microcracks; emulsion-like inclusions within pyrite and arsenopyrite are common [16]. This fine, inclusion-bound distribution hampers gravity recovery and prevents direct cyanidation without prior matrix breakdown, explaining the ores' pronounced refractoriness [17].

The main challenge is the low gold recovery caused by the metal being "locked" in sulfides, which leads to losses of 60–85% during direct cyanidation. The solution is to apply ore-unlocking methods—fine grinding, bio-oxidation, or thermal oxidation [18]. The best results are achieved with combined technologies (e.g., flotation + bio-oxidation + cyanidation) [19]. For deposits such as Pakrut, process optimization is key to substantially increasing gold recovery, improving economic efficiency, and reducing environmental impact. Moreover, more complete extraction of gold from refractory ores reduces the volume of toxic waste (e.g., arsenic-bearing sludges) and the environmental burden. From a scientific standpoint, devising an optimal beneficiation scheme requires a deep understanding of how gold is distributed within the complex ore matrix and of the mechanisms governing its transfer into concentrate and solution – knowledge that is important for advancing the entire field.

The aggregate features of Pakrut ores – the fine size of native gold, its association with robust sulfides (pyrite, arsenopyrite), and a complex mineralogical environment – define the core problem addressed here. Traditional single-stage beneficiation schemes do not ensure complete gold recovery from such ores, as evidenced by substantial metal losses [20]. The scientific objective of this study is to develop an optimal combined flowsheet for processing Pakrut's gold-bearing ores that accounts for their geological and mineralogical characteristics. This entails characterizing the ore's mineralogy and gold occurrence, evaluating liberation and beneficiation stages, and selecting a cost-effective, environmentally sound process configuration to maximize recovery.

## Materials and Methods

Representative run-of-mine ore from the Pakrut deposit was homogenized, riffle split, and characterized by particle-size distribution and head assays. Mineralogical characterization combined reflected-light microscopy, X-ray diffraction, and diagnostic leaching (chemical phase analysis) to quantify the principal gold carriers (pyrite, arsenopyrite), the modes of occurrence (free, fracture-related, intergranular/enclosed), and the size–morphology spectrum of native gold. At bench scale, we evaluated four processing routes: (a) direct cyanidation of ore ground to −0.074 mm (90% passing) at pH 11.5 with 1.5 kg/t NaCN, 40% solids, 24 h; (b) cyanidation with subsequent leaching of tailings and flotation; (c) flotation followed by cyanidation of a reground concentrate (−0.038 mm, 95% passing; CIP/CIL with up to 14 kg/t NaCN, 48 h); (d) gravity preconcentration + flotation

+ cyanidation, with the bulk mixture cyanidized at up to 18 kg/t NaCN. Flotation tests employed sodium butyl xanthate (collector), copper sulfate (activator), sodium carbonate and sodium hexametaphosphate (modifiers), and pine oil (frother); grind sizes and reagent dosages were optimized in closed-circuit experiments. Flotation experiments were carried out using a laboratory flotation machine (Model 237 FL-A, Mechanobr, Russia) equipped with a 0.75-L cell. The pulp solids content was maintained at 25–40 wt.% solids, and more than 50% of the particles were finer than 0.074 mm. Prior to flotation, flotation reagents were added to the cell and the pulp was conditioned under agitation for several minutes to ensure a homogeneous suspension. Flotation tests were performed in a closed-circuit configuration comprising rougher flotation, two cleaning stages, and two scavenging stages. The pulp pH was monitored and controlled using sodium carbonate (Na2CO3). The number of stages and operating parameters were kept constant across all reported tests to ensure comparability of recoveries and product grades. Gold grade and recovery were determined by fire assay and mass balance; the concentrate composition (Au, Ag, S, As, and major elements) was analyzed to assess downstream processing constraints and compare flowsheet performance.

## Results and Discussion

The Pakrut ores are multimineralic: the framework is formed by pyrite and arsenopyrite, with a substantial contribution from quartz – the principal hosts of gold. Feldspars, carbonates, chlorite, and sericite are also present in notable amounts; average contents are listed in Table 1. Variations in composition and texture affect liberation and the choice of beneficiation regimes.

**Table 1** – Mineral composition of Pakrut gold-bearing ores

| Minerals | Content, % |
|---|---|
| Pyrite | 0.98 |
| Arsenopyrite | 0.70 |
| Magnetite | 0.67 |
| Ilmenite | |
| Rutile | |
| Feldspar | 38.20 |
| Quartz | 36.28 |
| Dolomite and carbonates | 8.07 |
| Chlorite | 8.61 |
| Sericite, kaolinite | 5.72 |
| Others | 0.77 |

Diagnostic (chemical phase) analysis indicates a predominance of free (native) gold and fine to submicroscopic inclusions within sulfides. Hard-to-access forms account for only 2–3%, which implies the potential for high recoveries with fine grinding and a rational combination of processing stages.

Additional investigation of mineral composition was carried out by X-ray phase analysis. On the X-ray pattern of the initial ore (Fig. 1), the main phases are clearly registered. Quantitative analysis showed: quartz 39.28–92.38%; talc 14.97%; alumina 1.49–23.06%; iron(III) and iron(II) oxides 0.93–10.58%; manganese 0.01–0.38%; magnesium 0.10–6.12%; calcium 0.84–12.33%; potassium 0.20–7.54%; sodium 0.19–8.45%; phosphorus(V) 0.01–0.73%; sulfur 0.00–0.05%; carbon dioxide 0.20–7.92%; water 0.02–0.48%; other components 0.38–14.79%.

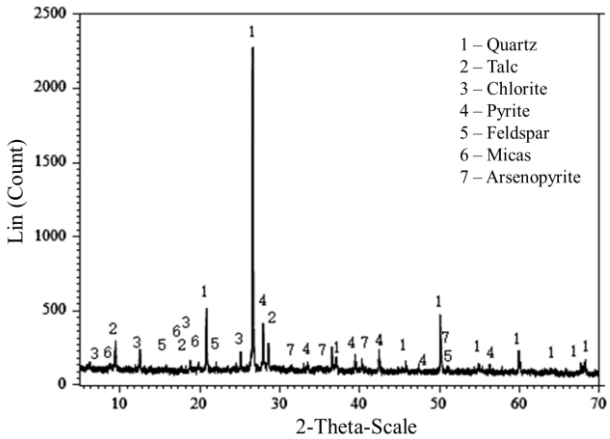


**Figure 1** - X-ray of the initial ore

Study of the size distribution of native-gold particles showed a predominance of medium and fine fractions (Table 2). Over 99% of visible gold is concentrated in the size range from −0.3 to +0.01 mm, which requires careful control of ore grinding before beneficiation (Table 3).

**Table 2** – Distribution of gold by phases

| Phase | Native gold | Gold enclosed in sulfides | Gold bound to other minerals | Total |
|---|---|---|---|---|
| Grade, g/t | 5.01 | 0.39 | 0.12 | 5.52 |
| Percent, % | 90.76 | 7.07 | 2.17 | 100 |

Gold is present mainly as native gold. As the silver content in gold increases, its microscopic color changes from golden-yellow to bright yellow. Gold occurs primarily as included gold, crack-

contained gold, and intergranular gold in pyrite, arsenopyrite, sphalerite, jamesonite, and gangue.

**Table 3** – Size distribution of native-gold particles

| Class | Particle size, mm | Percent, % | Cumulative, % |
|---|---|---|---|
| Coarse | -0.3+0.074 | 36.43 | 36.43 |
| Medium | -0.074+0.030 | 32.24 | 68.67 |
| Fine | -0.030+0.010 | 31.19 | 99.86 |
| Microfine | -0.010+0.001 | 0.14 | 100.00 |

The shape of native gold is also an important factor governing its technological behavior. As seen from Table 4, granular and irregular particles predominate and together account for more than half of all gold.

**Table 4** – Morphologies of native gold in Pakrut ores

| Particle shape | Percent, % |
|---|---|
| Granular | 31.51 |
| Irregular | 24.66 |
| Dendritic, veined | 17.81 |
| Platy, triangular | 9.59 |
| Rounded | 12.33 |
| Ellipsoidal | 4.11 |
| **Total** | 100 |

Analysis of the distribution of native-gold morphologies is important for understanding the geological conditions of its formation and for selecting optimal recovery methods. At this deposit, the morphology of native gold is quite diverse.

From the table it is evident that the most common are granular gold particles (31.51%) and irregular forms (24.66%). Dendritic and veined forms account for 17.81%, while platy and triangular forms make up 9.59%. Rounded particles and ellipsoidal forms are less frequent, amounting to 12.33% and 4.11%, respectively.

Overall, rounded or ellipsoidal gold is less prone to grinding, which can hinder leaching and flotation. In contrast, native gold of irregular morphologies – such as dendritic, veined, or platy particles – is more readily milled. This has a favorable effect on the efficiency of gold flotation and leaching.

## Occurrence of Gold

The study of the morphology and distribution of gold in the gold-bearing ores of the Pakrut deposit showed that it occurs both in free and in bound form. The most common are crack-related segregations of gold associated with arsenopyrite, pyrite, quartz, and sericite (Table 5).

**Table 5** – Forms of gold occurrence and associated minerals

| Form | Associated minerals | Share, % | Cumulative, % |
|---|---|---|---|
| Wrapped gold | Arsenopyrite | 0.05 | 1.97 |
| | Pyrite | 0.20 | |
| | Sericite | 1.72 | |
| Intercrystalline gold | Arsenopyrite, quartz | 1.24 | 18.58 |
| | Arsenopyrite, sericite | 1.93 | |
| | Arsenopyrite, pyrite | 0.06 | |
| | Quartz, sericite | 1.68 | |
| | Pyrite, quartz | 13.73 | |
| Crack-type gold | Arsenopyrite | 58.66 | 62.41 |
| | Quartz | 1.12 | |
| | Sericite | 0.97 | |
| | Pyrite | 1.29 | |
| | Siderite | 0.37 | |
| Free gold | – | 17.03 | 17.03 |
| **Total** | – | 100.00 | 100.00 |

A smaller but technologically important fraction of the metal occurs in the free state (17%), which favors its recovery by conventional processing methods. At the same time, the presence of gold wrapped in sulfide minerals, as well as intercrystalline gold, imparts technological refractoriness to the ores and requires the use of combined unlocking methods.

The analysis of the data indicates that more than half of the gold is concentrated as crack-related segregations in arsenopyrite, which confirms the leading role of this mineral as the main carrier of the precious metal. A significant portion of gold (about 17%) is present in the free form, which ensures the possibility of its effective recovery by cyanidation and gravity concentration. At the same time, the presence of intercrystalline and wrapped gold (about 20%) requires fine grinding of the ore and the application of flotation or alternative unlocking methods capable of releasing gold from the sulfide matrix.

### Characteristics of the Distribution of Other Metal-Bearing Minerals

Mineralogical study of the gold-bearing ores of the Pakrut deposit showed that, along with native gold and its inclusions in sulfides, pyrite, arsenopyrite, and several subordinate minerals play a significant role in the formation of the ore mass, exerting a direct influence on the conditions of beneficiation and recovery of the precious metal.

**Pyrite ($FeS_2$)** is one of the most widespread sulfide minerals in the Pakrut ores and at the same time an important gold carrier. It occurs both as independent grains of varying size and as intergrowths with vein and other ore minerals. The distribution of pyrite across size fractions is uneven: large grains up to 0.8 mm are found alongside much smaller particles down to 0.002 mm. Particularly inaccessible are gold inclusions within microfine pyrite, since their liberation requires ultrafine grinding, which increases the energy costs of processing. Pyrite is often associated with arsenopyrite, limonite, and quartz, forming complex aggregates that determine the refractory nature of the ore and cause elevated gold losses in flotation and cyanidation tails.

**Arsenopyrite (FeAsS)** plays a key role in ore formation and is the main carrier of finely dispersed gold. Its grains range in size from 0.005 to 0.050 mm and occur both in free form and as intergrowths with vein minerals. Characteristic features include arsenopyrite–quartz and arsenopyrite–sericite aggregates, as well as fine and microfine inclusions that are difficult to liberate during conventional grinding. It is these arsenopyrite associations that account for the predominance of crack-related gold in Pakrut ores, making it necessary to use combined unlocking methods, including flotation and oxidative processes.

**Limonite ($2Fe_2O_3 \cdot 3H_2O$)**. Although present only in small amounts, limonite commonly infills fractures and grain boundaries in pyrite, modifying sulfide surfaces, lowering hydrophobicity, and complicating flotation; accordingly, the reagent scheme must be adjusted to maintain selectivity. Overall, the spatial association of pyrite, arsenopyrite, and limonite indicates that gold is closely tied to these phases. The main processing challenges are gold microinclusions in pyrite and arsenopyrite and the difficulty of liberating the precious metal from stable intergrowths. These features confirm the refractory nature of the ore and necessitate the application of fine and ultrafine grinding, flotation, and additional oxidative unlocking stages to improve gold recovery.

### Physical Properties of the Ore

Pakrut gold ore has an average density of about 2.62 t/m³ (medium density) and a Mohs hardness of 6–8, indicating a moderately hard material. The presence of abrasive minerals such as quartz, pyrite, and arsenopyrite means the ore can cause significant equipment wear, necessitating heavy-duty crushing and grinding to effectively liberate the fine gold particles. The ore's crushability index of around 1.6 further suggests it is a medium-strength rock, consistent with its density and hardness. Additionally, with an angle of repose of roughly 40°, the ore forms stable piles — an important factor for safe stockpiling and tailings management.

### Beneficiation Experiment

A series of laboratory experiments on processing the gold-bearing ores of the Pakrut deposit was carried out at several research laboratories, including the chemical laboratory of JV "Pakrut", the ore beneficiation laboratory of the V.I. Nikitin Institute of Chemistry of the NAST, the Central Chemical Laboratory of the Main Geological Directorate under the Government of the Republic of Tajikistan and the Beijing Research Institute of Mining and Metallurgy (Kryso Resources plc). During these experiments, various technological approaches were investigated, including direct cyanidation, flotation, gravity separation, and combined variants thereof. The experiments aimed to determine the optimal flowsheet that would ensure the maximum possible gold recovery under acceptable processing conditions.

### Direct Cyanidation

Direct cyanidation was performed on ore ground to 90% −0.074 mm using 1.5 kg/t NaCN at pH = 11.5 (maintained with 1.5 kg/t lime), with 40% solids for 24 h. The test yielded 90.05% Au recovery, 0.55 g/t Au in tails, and 1.5 kg/t cyanide consumption. The experimental results are presented in Table 6.

**Table 6** – Results of direct cyanidation

| Gold in tails, g/t | Gold recovery, % | NaCN consumption, kg/t |
|---|---|---|
| 0.55 | 90.05 | 1.5 |

The obtained data showed a fairly high level of gold recovery (90.05%), confirming the

effectiveness of cyanidation for finely ground ore. However, part of the metal remained in the cyanidation tailings, which necessitated the evaluation of more advanced flowsheets. The next stage was the study of a combined process that included cyanidation, subsequent leaching of the cyanidation tailings, and flotation. The results obtained are given in Table 7.

**Table 7** – Results of flotation of cyanidation tailings

| Product | Yield, % | Au grade, g/t | Au recovery, % |
|---|---|---|---|
| Flotation concentrate | 1.58 | 23.43 | 64.12 |
| Flotation tails | 98.42 | 0.21 | 35.88 |
| Cyanidation tailings (feed) | 100.0 | 0.55 | 100.00 |

**Cyanidation + Tailings Leaching and Flotation**

To increase gold recovery, a combined flowsheet was tested that included flotation and additional leaching of the cyanidation tailings. This scheme made it possible to achieve a more complete recovery of gold (overall above 92%), confirming its advantages over direct cyanidation.

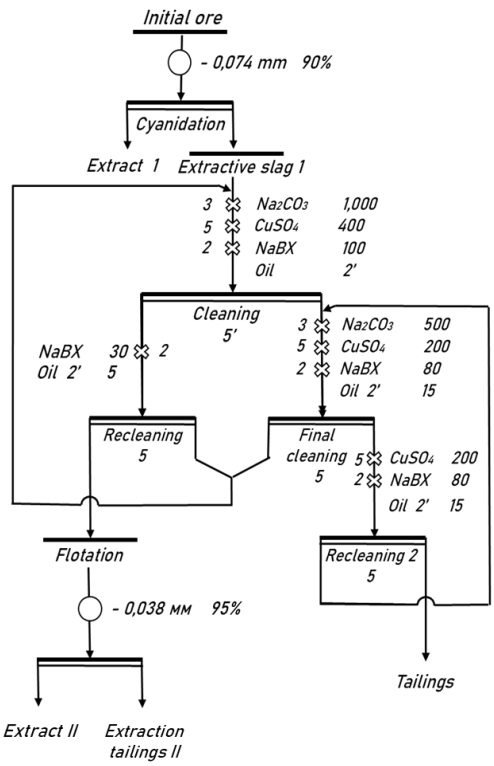


**Figure 2 -** Process flowsheet: cyanidation + tailings leaching + flotation

The efficiency of a flotation–cyanidation scheme was also tested. The ore was floated, after which the concentrate was treated by cyanidation at a higher reagent dosage (NaCN – 4 kg/t; grind size −0.038 mm with 95% of the fine class). The results are given in Table 8.

**Table 8** – Results of cyanidation of flotation concentrate

| Concentrate grade, g/t | Gold in tails, g/t | Recovery, % | NaCN, kg/t |
|---|---|---|---|
| 23.43 | 15.42 | 34.19 | 4.0 |

In this case, the total gold recovery was 85.24%, which is lower than for the combined scheme Fig. 2. Closed-circuit flotation tests nevertheless showed the possibility of obtaining concentrates with high gold contents.

**Flotation + Cyanidation**

Within this beneficiation option, the initial ore was ground to −0.074 mm with 81% of the fine fraction, while the flotation concentrate was ground to −0.038 mm (95%). At the flotation stage, a concentrate with a high gold grade of 127 g/t was obtained, with a yield of 3.85% and a recovery of 91.87% (Table 9). However, significant metal losses (8.13%) were recorded in the flotation tails, which ultimately harmed the overall efficiency of the scheme.

**Table 9** – Flotation results (closed circuit)

| Product | Yield, % | Au grade, g/t | Au recovery, % |
|---|---|---|---|
| Concentrate | 3.85 | 127 | 91.87 |
| Tails | 96.15 | 0.45 | 8.13 |
| Ore | 100.0 | 5.32 | 100.0 |

The obtained flotation concentrate was subjected to cyanidation under both CIL and CIP schemes. With a NaCN dosage of 14 kg/t, pH = 11.5, and a leaching duration of 48 hours, gold recovery reached 92.79% (CIL) and 92.12% (CIP), while the gold content in the tails remained as high as 9.16–10.01 g/t (Table 10). Thus, despite the high degree of concentrate enrichment, a significant portion of the precious metal remained in the solid phase.

The “flotation + cyanidation” scheme, presented in Figure 3, demonstrated a total gold recovery of 85.24%. This result was lower compared with other combined options, particularly “cyanidation + tailings leaching + flotation” (92.23%) and “gravity + flotation + cyanidation” (86.62%). The reason lies in the fact that during

flotation, part of the finely disseminated gold, closely associated with pyrite and arsenopyrite, remains in the tails, and subsequent cyanidation of the concentrate does not compensate for these losses.

**Table 10** – Results of cyanidation of the flotation concentrate

| Product | Au, g/t | Au in tails, g/t | Recovery, % | NaCN, kg/t |
|---|---|---|---|---|
| Concentrate (CIL) | 127 | 9.16 | 92.79 | 14 |
| Concentrate (CIP) | 127 | 10.01 | 92.12 | 14 |
| Flotation tails | 0.45 | 0.38 | 15.56 | 1 |

Therefore, the flotation–cyanidation scheme is characterized by a high degree of gold concentration in the beneficiation product but a relatively low overall process efficiency. For practical application, it may be advisable in cases where the priority is obtaining concentrates with high gold grades. However, to achieve maximum overall gold recovery, it should be combined with additional stages (e.g., tailings leaching or finer grinding).

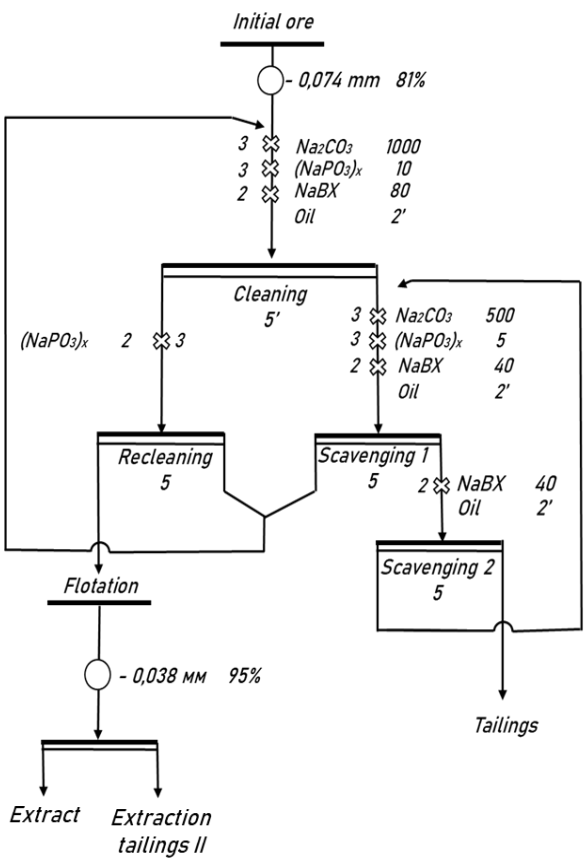


**Figure 3 -** Flotation + cyanidation flowsheet

### 3.4.4. Gravity + Flotation + Cyanidation

To improve the selectivity of gold recovery, a combined flowsheet was tested in which gravity separation was applied prior to flotation. The gravity stage allowed the isolation of a high-grade concentrate (471 g/t Au) with a recovery of 31.46%, although its yield was relatively low at only 0.37%. The subsequent flotation step produced an additional concentrate containing 120.1 g/t Au with 61.84% recovery. When the gravity and flotation concentrates were combined, the resulting mixture reached an average gold grade of 160.4 g/t and an overall recovery of 93.30% (Table 11).

**Table 11** – Results of gravity and flotation beneficiation

| Product | Yield, % | Au grade, g/t | Au recovery, % |
|---|---|---|---|
| Concentrate 1 (gravity) | 0.37 | 471.00 | 31.46 |
| Concentrate 2 (flotation) | 2.83 | 120.10 | 61.84 |
| Mixture of concentrates | 3.19 | 160.40 | 93.30 |
| Tails | 96.81 | 0.38 | 6.70 |
| Ore | 100.0 | 5.49 | 100.0 |

The combined concentrate was then subjected to cyanidation at a NaCN dosage of 18 kg/t. Under these conditions, the recovery reached 92.84%, with residual gold content in the leaching tails of 11.48 g/t (Table 12).

**Table 12** – Cyanidation of the concentrate mixture

| Product | Au, g/t | Au in tails, g/t | Recovery, % | NaCN, kg/t |
|---|---|---|---|---|
| Mixture of concentrates | 160.4 | 11.48 | 92.84 | 18 |

As illustrated in Figure 4, the gravity–flotation–cyanidation scheme ensured a total recovery of 86.62%. Although this result was higher than for the flotation–cyanidation option (85.24%), it remained lower compared with the cyanidation + tailings leaching + flotation scheme (92.23%). The main limitation of this approach is the extremely low yield of the gravity concentrate, which, despite its exceptionally high gold grade, contributes only marginally to the overall metal balance.

Thus, the gravity–flotation–cyanidation scheme demonstrates the potential to enhance concentrate quality and recovery efficiency. However, its industrial application is constrained by the low productivity of the gravity stage, which reduces its attractiveness compared with other combined processing options.

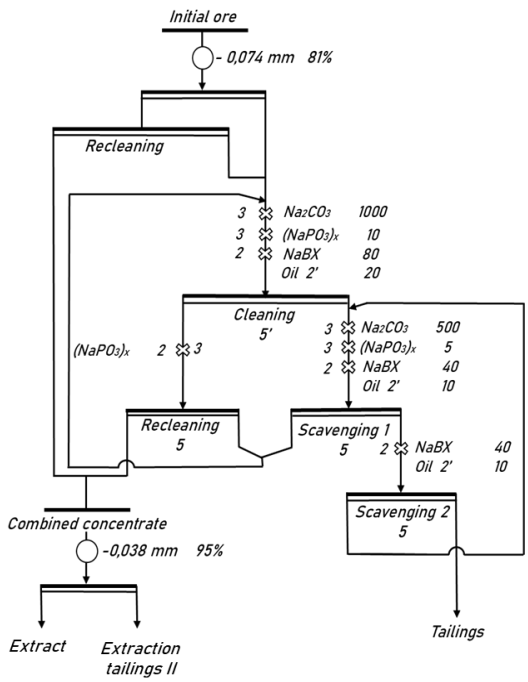


**Figure 4 -** Gravity + flotation + cyanidation flowsheet

## Comparative Analysis

The experimental studies demonstrated that the efficiency of different processing flowsheets for the Pakrut gold-bearing ores varies significantly (Table 13). The highest performance was achieved with the combined flowsheet "cyanidation + tailings leaching + flotation," which ensured total gold recovery of 92.23%. This option allows for a more complete release of finely disseminated gold and minimizes metal losses in the tails, making it the most promising for practical implementation.

**Table 13** – Comparison of beneficiation scheme effectiveness

| № | Technology | Au recovery, % |
|---|---|---|
| 1 | Cyanidation | 90.05 |
| 2 | Cyanidation + tailings leaching + flotation | 92.23 |
| 3 | Flotation + cyanidation | 85.24 |
| 4 | Gravity + flotation + cyanidation | 86.62 |

Direct cyanidation also showed a high result (90.05%); however, part of the gold remained in the solid phase due to its association with pyrite and arsenopyrite. This limits the method's effectiveness and indicates its applicability mainly for ores that are relatively easy to unlock.

The "flotation + cyanidation" scheme provided a lower recovery rate of 85.24%. Despite the high gold grade in the flotation concentrate (127 g/t), substantial metal losses in the flotation tails led to reduced overall efficiency. Similar limitations were observed in the "gravity + flotation + cyanidation" scheme, where the total recovery was 86.62%. Although the gravity concentrate showed very high gold grades, its yield was extremely low, which reduces the industrial value of this option.

Thus, the comparative analysis confirms that the most rational approach for processing refractory gold-bearing ores of the Pakrut deposit is the flowsheet combining cyanidation with subsequent tailings leaching and flotation. This scheme ensures the best balance between gold recovery, concentrate quality, and minimization of technological losses.

## Chemical Composition of Products

To refine the quality of the obtained concentrates, a chemical analysis of their composition was carried out (Tables 14, 15). The results showed that, along with a high gold content, the concentrates contained significant amounts of associated components, primarily sulfur and arsenic.

The gold content in the concentrate after the cyanidation and flotation stage ranged from 23 to 43 g/t, while silver was 14.24 g/t. At the same time, the sulfur content reached 34.13%, and arsenic 9.86% (Table 14). These values indicate strong sulfide mineralization of the ore, which explains its refractory nature and the necessity of additional stages to break down the sulfide matrix during metallurgical processing.

**Table 14** – Composition of the concentrate after cyanidation and flotation

| Element | Au, g/t | Ag, g/t | S, % | As, % |
|---|---|---|---|---|
| Values | 23 – 43 | 14.24 | 34.13 | 9.86 |

Analysis of the flotation concentrate showed an even higher gold grade of 127 g/t, with a silver content of 20.92 g/t. The sulfur content was 17.29%, and arsenic 7.78%. Calcium (0.75%), magnesium (0.78%), and manganese (0.041%) were also present (Table 15). These elements may influence subsequent hydrometallurgical processes by altering leaching kinetics and solution properties.

**Table 15** – Composition of the flotation concentrate

| Element | Au, г/т | Ag, г/т | S, % | Ca, % | Mg, % | Mn, % | As, % |
|---|---|---|---|---|---|---|---|
| Values | 127 | 20.92 | 17.29 | 0.75 | 0.78 | 0.041 | 7.78 |

Thus, chemical analysis confirmed that the concentrates from the Pakrut deposit have a complex composition with high levels of harmful impurities, primarily sulfur and arsenic. This requires a specific approach to subsequent metallurgical processing, including the application of oxidative pretreatment technologies aimed at reducing the content of these elements and improving the recovery of precious metals.

## Conclusion

The conducted studies confirmed that the gold-bearing ores of the Pakrut deposit are characterized by complex mineralogy and a refractory nature, which significantly complicates the extraction of the precious metal by traditional methods. It has been established that native gold occurs predominantly in a finely dispersed form, closely associated with pyrite and arsenopyrite, which necessitates the use of combined technologies. Comparative analysis of the flowsheets showed that the maximum gold recovery (over 92%) is achieved by combining cyanidation with tailings leaching and flotation. This scheme not only improves metallurgical performance but also reduces metal losses and lowers the volume of toxic waste. The results of the work confirm the need for an integrated approach to processing refractory ores of Central Tajikistan and provide a foundation for developing industrial technologies capable of ensuring efficient and environmentally safe gold recovery.

***Conflict of interest.*** There are no competing interests for all authors.

***CRediT author statement:*** **Kh. Kholov:** development of the research idea; analysis of the topic development, development of the technological scheme, formulation of conclusions, selection of bibliography, writing the text; **Sh. Juraqulov:** processing of research results using program Microsoft Excel; **Sh. Samihzoda** – is a performer of experimental works, direct management of experimental research; **H. Mahmudov** – analysis of the results obtained in geology and mineralogy.

***Cite this article as:*** Kholov KhI, Juraqulov ShR, Samihzoda ShR, Mahmudov HA. Mineralogical features and optimization of combined beneficiation flowsheets for refractory gold-bearing ores of the Pakrut deposit (Central Tajikistan). Kompleksnoe Ispolzovanie Mineralnogo Syra = Complex Use of Mineral Resources. 2027; 342(3):16-26. https://doi.org/10.31643/2027/6445.26

# Пакрут кенорнының (Орталық Тәжікстан) қиын өңделетін алтынқұрамды кендерінің минералогиялық ерекшеліктері және оларды байытудың құрамдастырылған технологиялық сұлбаларын оңтайландыру

**[1,2*]Холов Х.И., [3]Жұрақұлов Ш.Р., [1]Самихзода Ш.Р., [4]Махмудов Х.А.**

*[1]В.И. Никитин атындағы химия институты Тәжікстан ҰҒА, Душанбе, Тәжікстан*
*[2]С. Айни атындағы Тәжік мемлекеттік педагогикалық университеті, Душанбе, Тәжікстан*
*[3]Геология, жер сілкінісіне төзімді құрылыс және сейсмология институты Тәжікстан ҰҒА, Душанбе, Тәжікстан*
*[4]Тәжікстан тау-кен металлургия институты, Бустон, Тәжікстан*

Мақала келді: *8 қазан2025*
Сараптамадан өтті: *1 қараша 2025*
Қабылданды: *5 қаңтар 2025*

Бай кен орындарының сарқылуы және қиын өңделетін алтын құрамды кендер үлесінің артуына байланысты оларды өңдеу әдістерін жетілдіру өзекті міндетке айналды. Бұл мақалада Орталық Тәжікстанның Зеравшан-Гиссар аймағында орналасқан Пакрут кен орнындағы алтын құрамды кендерді кешенді зерттеу нәтижелері ұсынылған. Минералогиялық талдау алтынның негізгі тасымалдаушылары пирит пен арсенопирит екенін көрсетті, металл негізінен ұсақ қосындылар мен жарықшақты байланысқан шоғырланулар түрінде орналасқан. Алтынның айтарлықтай бөлігі бос күйінде (17,03%) кездеседі; дегенмен, басым бөлігі жарықшақты байланысқан (62,41%) және негізінен арсенопиритпен қауымдастырылған түрде болады. Мұндай бөліну бір сатылы өңдеудің тиімділігі шектеулі болатынын және ашу мен бөліп алудың құрамдастырылған әдістерінің қажеттілігін түсіндіреді. Кендердің физика-химиялық зерттеулері сульфид матрицасында алтынның ұсақ сеппелі болатынын, сондай-ақ жоғары қаттылығы мен абразивтілігіне байланысты қиын өңделетін сипатын анықтады. Зертханалық жағдайларда әртүрлі байыту процесінің сұлбалары сыналды: олар, тікелей цианидтеу; флотациямен қалдықтарды қосымша шаймалауды үйлестіру; және гравитациялық байытуды қамтитын нұсқалар. Салыстырмалы талдау ең жоғары тиімділікке (Au экстракциясы 92,23%) «цианидтеу + қалдықтарды шаймалау + флотация» сұлбасын қолдану арқылы қол жеткізілетінін көрсетті. Тікелей

цианидтеу жоғары көрсеткіш көрсетті (90,05%), бірақ тиімділігі төмен болды. Флотация-цианидтеу және гравитация-флотация сұлбалары салыстырмалы түрде төмен нәтижелер көрсетті. Алынған деректер Пакрут кен орнының қиын өңделетін кендерін өңдеуге арналған кешенді тәсілдің келешегі бар екендігін растайды. Байыту сұлбаларын оңтайландыру бағалы металдарды өндіруді айтарлықтай арттыруға, технологиялық шығындарды азайтуға және мышьяк бар қалдықтардың жиналуымен байланысты экологиялық тәуекелдерді азайтуға мүмкіндік береді.

***Түйін сөздер:*** Пакрут кенорны, қиын өңделетін кендер, алтын, пирит, арсенопирит, циандау, флотация, гравитациялық байыту, минералогия, кендерді байыту.

***Авторлар туралы ақпарат:***

***Холов Х.И.*** — *Техника ғылымдарының кандидаты, Тәжікстан Ұлттық Ғылым Академиясы В.И. Никитин атындағы Химия институтының Кенді байыту зертханасының аға ғылыми қызметкері; С. Әйни атындағы Тәжікстан Мемлекеттік Педагогикалық Университетінің Химиялық технология және экология кафедрасының аға оқытушысы, 734063, Әйни көш., 299/2, Душанбе, Тәжікстан. E-mail: Kholmahmad90@mail.ru; ORCID ID: https://orcid.org/0000-0002-8202-5919*

***Жұрақұлов Ш.Р.*** — *Аға ғылыми қызметкер, Тәжікстан Ұлттық ғылым академиясының Геология, жер сілкінісіне төзімді құрылыс және сейсмология институты, 734063, Айни к-сі, 299/2, Душанбе, Тәжікстан. E-mail: shaih8888@mail.ru; ORCID ID: https://orcid.org/0009-0001-1255-8541*

***Самихзода Ш.Р.*** — *Техника ғылымдарының докторы, Тәжікстан Ұлттық ғылым академиясының В.И. Никитин атындағы Химия институтының кендерді байыту зертханасының бас ғылыми қызметкері, 734063, Айни к-сі, 299/2, Душанбе, Тәжікстан. E-mail: samikhov72@mail.ru; ORCID ID: https://orcid.org/0009-0002-7454-7343*

***Махмудов Х.А.*** — *Техника ғылымдарының кандидаты, Тәжікстан тау-кен металлургия институтының Тау-кен ісі факультетінің деканы, 735730, Маяковский к-сі, 6, Бустон, Тәжікста. E-mail: obogatitel_0903@mail.ru; ORCID ID: https://orcid.org/0009-0005-8428-5334*

# Минералогические особенности и оптимизация комбинированных схем обогащения упорных золотосодержащих руд месторождения Пакрут (Центральный Таджикистан)

**[1,2*]Холов Х.И., [3]Джуракулов Ш.Р., [1]Самихзода Ш.Р., [4]Махмудов Х.А.**

*[1]Институт химии им. В.И. Никитина НАН Таджикистана, Душанбе, Таджикистан*
*[2]Таджикский государственный педагогический университет им. С. Айни, Душанбе, Таджикистан*
*[3]Институт геологии, сейсмостойкого строительства и сейсмологии НАНТ, Душанбе, Таджикистан*
*[4]Горно-металлургический институт Таджикистана, Бустон, Таджикистан*

Получена: *8 октября 2025*
Рецензирована: *1 ноября 2025*
Принята: *5 января 2025*

**АННОТАЦИЯ**

На фоне истощения богатых месторождений и роста доли упорных золотосодержащих руд совершенствование методов их переработки стало актуальной задачей. В данной работе представлены результаты комплексного исследования золотосодержащих руд месторождения Пакрут, расположенного в Зеравшан-Гиссарской зоне Центрального Таджикистана. Минералогический анализ показал, что основными носителями золота являются пирит и арсенопирит, при этом металл преимущественно локализован в виде тонких включений и трещинно-связанных скоплений. Заметная доля золота присутствует в свободном состоянии (17,03%); однако преобладающая часть является трещинно-связанной (62,41%) и главным образом ассоциирована с арсенопиритом. Такое распределение объясняет ограниченную эффективность одностадийной переработки и обосновывает необходимость комбинированных методов вскрытия и извлечения. Физико-химические исследования руд выявили их упорный характер, обусловленный тонким вкраплением золота в сульфидной матрице, а также высокой твердостью и абразивностью. В лабораторных условиях были опробованы различные технологические схемы обогащения: прямая цианидация; комбинации с флотацией и дополнительным выщелачиванием хвостов; а также варианты с включением гравитационного обогащения. Сравнительный анализ показал, что наибольшая эффективность (извлечение Au 92,23%) достигается по схеме «цианидация + выщелачивание хвостов + флотация». Прямая цианидация показала высокий показатель (90,05%), но оказалась менее эффективной. Схемы «флотация-цианирование» и «гравитация-флотация» показали сравнительно более низкие результаты. Полученные данные подтверждают перспективность комплексного подхода для переработки упорных руд Пакрута. Оптимизация схем обогащения позволяет существенно повысить извлечение драгоценного металла, сократить технологические потери и минимизировать экологические риски, связанные с накоплением мышьяксодержащих отходов.

***Ключевые слова:*** месторождение Пакрут, упорные руды, золото, пирит, арсенопирит, цианирование, флотация, гравитационное обогащение, минералогия, обогащение руд.

| | |
|---|---|
| | ***Информация об авторах:*** |
| ***Холов Х.И.*** | *Кандидат технических наук, старший научный сотрудник лаборатории обогащения руд Института химии им. В.И. Никитина Национальной академии наук Таджикистана; старший преподаватель кафедры химической технологии и экологии Таджикского государственного педагогического университета им. С. Айни, 734063, ул. Айни, 299/2, Душанбе, Таджикистан. E-mail: Kholmahmad90@mail.ru; ORCID ID: https://orcid.org/0000-0002-8202-5919* |
| ***Джуракулов Ш.Р.*** | *Старший научный сотрудник, Институт геологии, сейсмостойкого строительства и сейсмологии Национальной академии наук Таджикистана, 734063, ул. Айни, 299/2, Душанбе, Таджикистан. E-mail: shaih8888@mail.ru; ORCID ID: https://orcid.org/0009-0001-1255-8541* |
| ***Самихзода Ш.Р.*** | *Доктор технических наук, главный научный сотрудник лаборатории обогащения руд Института химии им. В.И. Никитина Национальной академии наук Таджикистана, 734063, ул. Айни, 299/2, Душанбе, Таджикистан. E-mail: samikhov72@mail.ru; ORCID ID: https://orcid.org/0009-0002-7454-7343* |
| ***Махмудов Х.А.*** | *Кандидат технических наук, декан факультета Горное дело Горно-металлургического института Таджикистана, 735730, ул. Маяковского, 6, Бустон, Таджикистан. E-mail: obogatitel_0903@mail.ru; ORCID ID: https://orcid.org/0009-0005-8428-5334* |


## References


[1] Barbouchi A, et al. Advancements in improving gold recovery from refractory gold ores/concentrates: a review. Canadian Metallurgical Quarterly. 2024; 1-18. https://doi.org/10.1080/00084433.2024.2441548

[2] Surimbayev B, et al. Processing of refractory gold-bearing sulfide concentrates: A review. Mineral Processing and Extractive Metallurgy Review. 2024; 45(6):573-591. https://doi.org/10.1080/08827508.2023.2230344

[3] Vikentyev IV, Bortnikov NS. Gold deposits of Central and North. Geology of Ore Deposits. 2024; 66(5):477-483. DOI:10.1134/S1075701524700326

[4] Dosmukhamedov N, et al. Chlorination treatment for gold extraction from refractory gold-copper-arsenic-bearing concentrates. Sustainability. 2022; 14(17):11019. https://doi.org/10.3390/su141711019

[5] Anderson CW, Behum PT, Miller FW. Environmental and Occupational Health Regulations in the US Lead Industry. 1986.

[6] Mudd GM. Global trends in gold mining: Towards quantifying environmental and resource sustainability. Resources Policy. 2007; 32(1-2):42-56. https://doi.org/10.1016/j.resourpol.2007.05.002

[7] Foster RP. Gold in the year 2000: A global overview. Australian Journal of Earth Sciences. 1996; 43(1):1-14. https://doi.org/10.1080/08120099608728231

[8] Goldfarb RJ, et al. Phanerozoic continental growth and gold metallogeny of Asia. Gondwana Research. 2014; 25(1):48-102. https://doi.org/10.1016/j.gr.2013.03.002

[9] Wilson R, Mercier PHJ, Navarra A. Integrated artificial neural network and discrete event simulation framework for regional development of refractory gold systems. Mining. 2022; 2(1):123-154. https://doi.org/10.3390/mining2010008

[10] Sagers MJ. Regional trends in Russian gold production. Post-Soviet geography and economics. 1997; 38(6):315-356. https://doi.org/10.1080/10889388.1997.10641052

[11] Kholov KI, et al. Gold leaching by various solutions, alternative of cyanide and their prospects in the future //Journal of Siberian Federal University. Engineering & Technologies. 2021; 14(4):433-447. http://dx.doi.org/10.17516/1999-494X-0324

[12] Rahimov FK, Mamadjonov YM. Mineral resource potential of Tajikistan: As an important component of sustainable development of the silk road economic belt. Journal of Resources and Ecology. 2015; 6(2):125-128. https://doi.org/10.5814/j.issn.1674-764x.2015.02.012

[13] Kholov KhI, Niyozov AS, Juraqulov ShR, Samikhov ShR. Mineralogical and geochemical features of the gold-containing ores of the Pakrut deposit (Central Tajikistan) as the basis of gravity enrichment. Transbaikal State University Journal. 2024; 30(2):82-92. https://doi.org/10.21209/2227-9245-2024-30-2-82-92

[14] Kholov KI, et al. Geological study of gold deposits in the Republic of Tajikistan. Conference'X IV Numanov's readings' Proceedings. 2017; INIS-TJ(017):25-27.

[15] Rozhdestvina VI, Sorokin AP. First finds of native palladium, platinum, gold, and silver in brown coals of the Erkovets field (upper Amur region). Russian Journal of Pacific Geology. 2010; 4(6):483-494. https://doi.org/10.1134/S1819714010060035

[16] Shen L, et al. Atacamite discolouration under the influence of arsenates in wall paintings in the Kizil Grottoes, Xinjiang, China. Heritage Science. 2024; 12(1):292. https://doi.org/10.1186/s40494-024-01406-y

[17] Clarke J. A simplified gravity-recoverable-gold test. 2005.

[18] Gill CB. Gravity concentration. Materials beneficiation. New York, NY: Springer New York. 1991, 148-175. https://doi.org/10.1007/978-1-4612-3020-5_9

[19] Guner MK, et al. Automated mineralogy and diagnostic leaching studies on bulk sulfide flotation concentrate of a refractory gold Ore. Minerals. 2023; 13(10):1243. https://doi.org/10.3390/min13101243

[20] Vikentyev IV. Invisible and microscopic gold in pyrite: Methods and new data for massive sulfide ores of the Urals. Geology of ore deposits. 2015; 57(4):237-265. https://doi.org/10.1134/S1075701515040054